LUMEL
EVERYTHING COUNTS

COMING SOON

LJ12

LJ45

L306

LJ12, LJ25
LJ35, LJ45
L308,L306, L307
- SMART CTs

Specially designed CTs equipped with RJ12 socket or wire for screw terminals enable quick, easy and convenient connection with power network meter ND20CT type and additionally eliminate the risk of a faulty connection.

- Dedicated to ND20CT power network meter.
- Wide current range from 50 A to 600 A.
- Available in 1-phase and 3-phase versions.
- Secondary currents 0.1 A or 0.25 A.
- Measurement in accuracy class 0.5 or 1.

CE

EXAMPLE OF APPLICATION

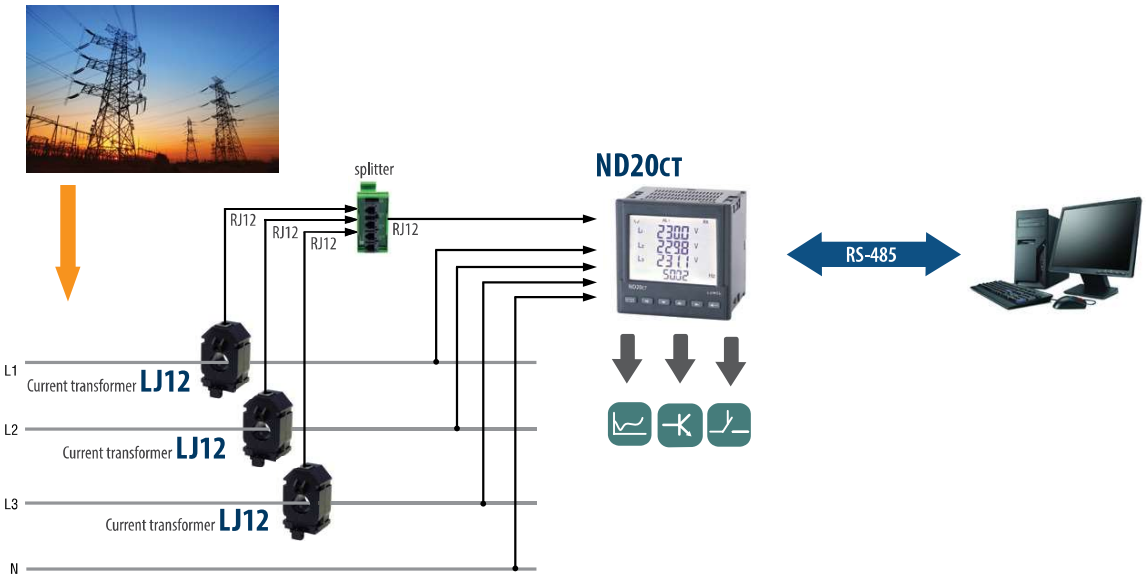

Measurements, monitoring, recording of network parameters and energy using three single-phase transformers with RJ12 slot.

LJ12, LJ25/ LJ35, LJ45 / L308,L306, L307
- SMART CTs

LUMEL
EVERYTHING COUNTS

EXAMPLE OF APPLICATION

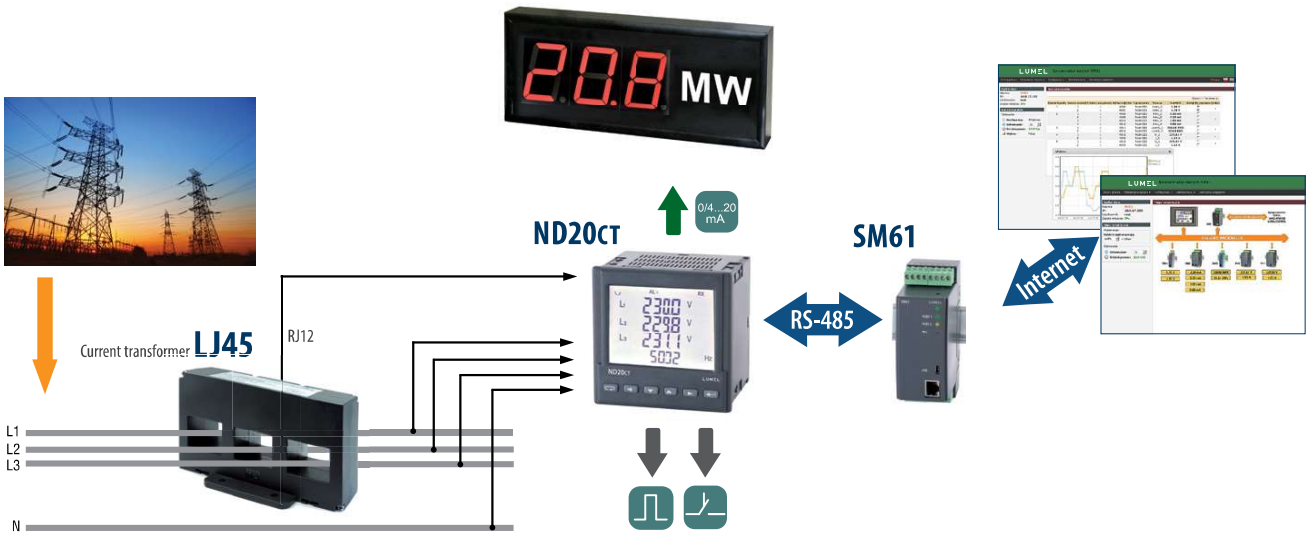

Measurements, monitoring, recording of network parameters and energy using a three-phase transformer with RJ12 slot.

EXAMPLE OF APPLICATION

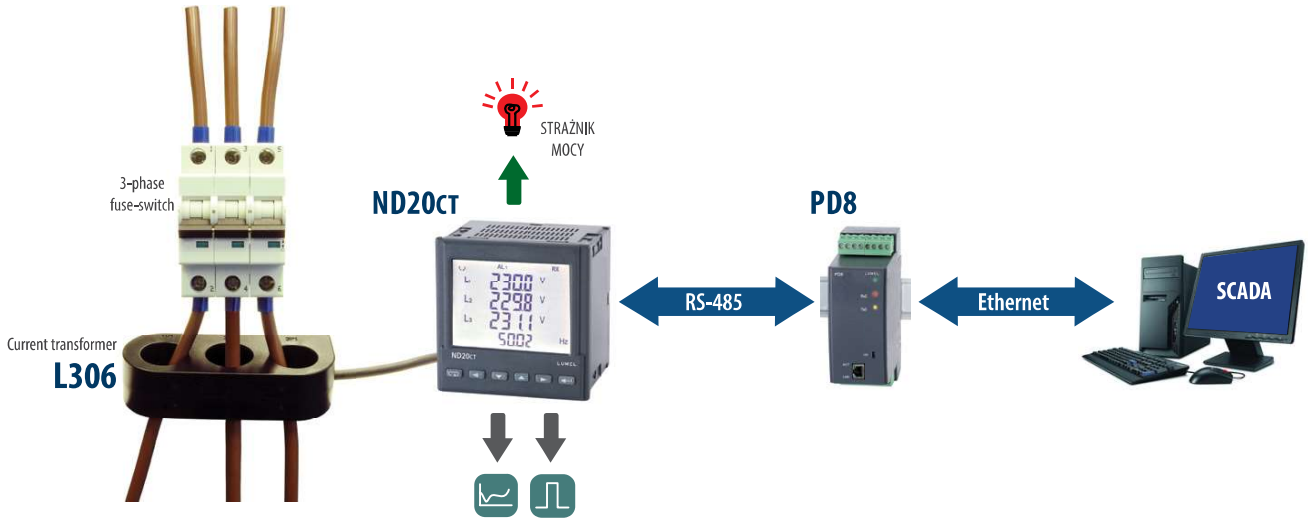

Measurements, monitoring, recording of network parameters and energy using a three-phase transformer with screw terminals.

LJ12, LJ25/ LJ35, LJ45 / L308,L306, L307
- SMART CTs

LUMEL
EVERYTHING COUNTS

TECHNICAL DATA

LJ12, LJ25, LJ35, LJ45	
Maximum system voltage	0,72 kV
Test voltage	3 kV for 1 minute
Operating frequency	50 Hz or 60 Hz
Rated primary current	100 mA
Overload withstand	1,2 x rated current continuously
Enclosure: Flame retardant grade classified	UL94V-0
Accuracy class	0.5 or 1
Operating temperature	-20°C...+85°C
Applicable standards	IEC/EN 60044-1, IEC/EN 61869

L308, L306, L307	
Rated primary current	63 A, 125 A and 250 A
Rated secondary current	250 mA
Częstotliwość pracy	50/60 Hz
Rated burden	0.1 VA
Accuracy class	0.5
Maximum operating voltage	0.72 kV
Thermal short circuit current (I_{th})	60 x I_n
Dynamic short circuit current (I_{dyn})	2.5 x I_{th}
Insulatiion class/ Protection rating	E/ IP20
Thermal class	B (130°C)
Operating temperature	-25°C < T_U < +60°C, 0....95% rH, bez kondensacji pary wodnej
Storage temperature	-40°C < T_L < +60°C

LJ12, LJ25/ LJ35, LJ45 / L308,L306, L307
- SMART CTs

LUMEL EVERYTHING COUNTS

ORDERING

TRANSFORMERS TO COOPERATION WITH ND20CT

Single-phase transformer RJ12 -hole diameter 21 mm

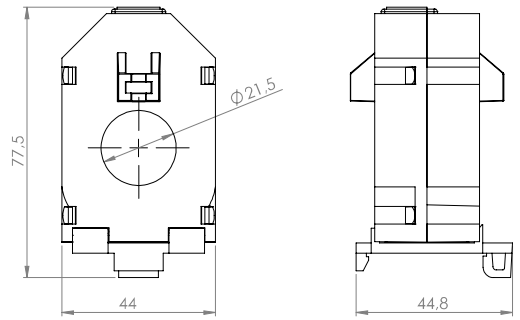

Code	Current ratio	Power/class
LJ12-132235S 000000 *	**50A/100mA**	**0.25VA/1**
LJ12-142235S 000000	60A/100mA	0.25VA/1
LJ12-182235S 000000	100A/100mA	0.25VA/0.5; 0.35VA/1
LJ12-202235S 000000	125A/100mA	0.25VA/0.5; 0.35VA/1
LJ12-222235S 000000	150A/100mA	0.25VA/0.5; 0.35VA/1
LJ12-232235S 000000	160A/100mA	0.25VA/0.5; 0.35VA/1
LJ12-242235S 000000	200A/100mA	0.25VA/0.5; 0.5VA/1
LJ12-272235S 000000	250A/100mA	0.25VA/0.5; 0.5VA/1

* - item available from our stock

Three-phase transformer RJ12 - busbar 15 x 15 mm

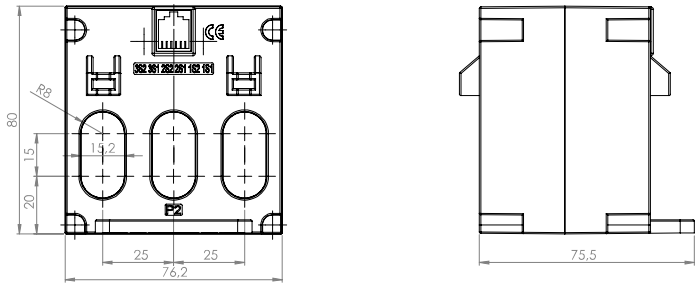

Code	Current ratio	Power/class
LJ25-142231S 000000	60A/100mA	0.25VA/1
LJ25-182235S 000000 *	**100A/100mA**	**0.25VA/0.5; 0.35VA/1**
LJ25-202235S 000000	125A/100mA	0.25VA/0.5; 0.35VA/1
LJ25-222235S 000000	150A/100mA	0.25VA/0.5; 0.35VA/1
LJ25-232235S 000000	160A/100mA	0.25VA/0.5; 0.35VA/1
LJ25-242235S 000000	200A/100mA	0.25VA/0.5; 0.35VA/1

* - item available from our stock

Three-phase transformer RJ12 - busbar 22 x 21 mm

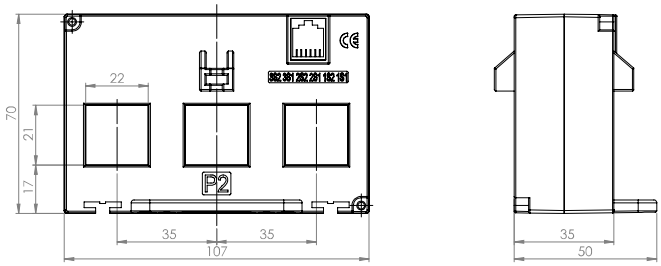

Code	Current ratio	Power/class
LJ35-142231S 000000	60A/100mA	0.25VA/1
LJ35-182235S 000000 *	**100A/100mA**	**0.25VA/0.5; 0.35VA/1**
LJ35-202235S 000000	125A/100mA	0.25VA/0.5; 0.35VA/1
LJ35-222235S 000000 *	**150A/100mA**	**0.25VA/0.5; 0.5VA/1**
LJ35-232235S 000000	160A/100mA	0.25VA/0.5; 0.5VA/1
LJ35-242235S 000000 *	**200A/100mA**	**0.25VA/0.5; 0.5VA/1**
LJ35-272235S 000000	250A/100mA	0.25VA/0.5; 0.5VA/1

* - item available from our stock

Three-phase transformer RJ12 - busbar 32 x 27 mm

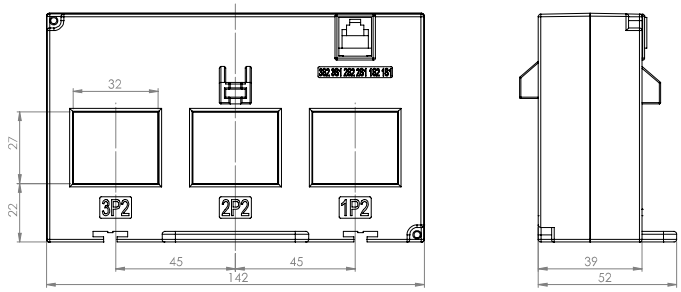

Code	Current ratio	Power/class
LJ45-272235S 000000 *	**250A/100mA**	**0.25VA/0.5; 0.5VA/1**
LJ45-312235S 000000	400A/100mA	0.25VA/0.5; 0.5VA/1
LJ45-332235S 000000	600A/100mA	0.25VA/0.5; 0.5VA/1

* - item available from our stock

LJ12, LJ25/ LJ35, LJ45 / L308,L306, L307
- SMART CTs

LUMEL EVERYTHING COUNTS

ORDERING

Three-phase transformer with screw terminal cable - hole diameter 8 mm, cable lenght 1550 mm	Code	Current ratio	Power/class
	L308 0632511BL0000 *	63A/250mA	0.1VA/0,5

* - item available from our stock

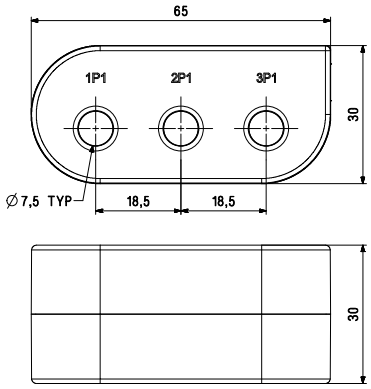

Three-phase transformer with screw terminal cable - hole diameter 15 mm, cable lenght 1550 mm	Code	Current ratio	Power/class
	L306 1252511BL0000 *	125A/250mA	0.1VA/0,5

* - item available from our stock

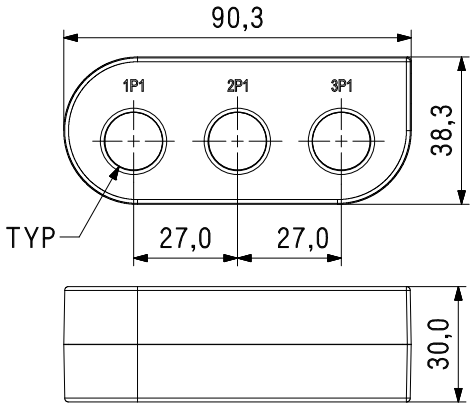

Three-phase transformer with screw terminal cable - hole diameter 26 mm, cable lenght 1550 mm	Code	Current ratio	Power/class
	L307 2502511BL0000 *	250A/250mA	0.1VA/0,5

* - item available from our stock

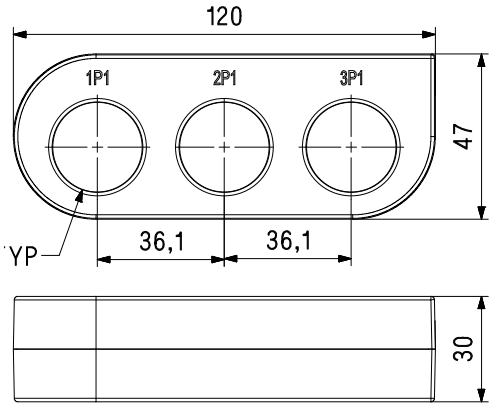

ORDERING - ACCESSORY TO CURRENT TRANSFORMER LJ12

SPLITTER

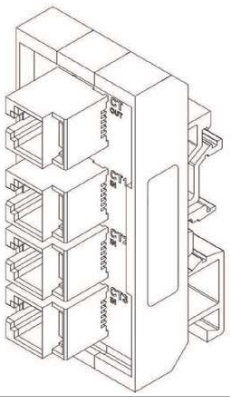

Code	Remarks
ND20CT-303	Splitter is recommended when connecting LJ single-phase current transformers with ND20CT meter.

For more information about Lumel products
please visit our website:
www.lumel.com.pl

Join us at Facebook!

LUMEL S.A.
ul. Sulechowska 1, 65-022 Zielona Góra, POLAND
tel.: +48 68 45 75 100, fax +48 68 45 75 508
www.lumel.com.pl

Export department:
tel.: (+48 68) 45 75 139, 45 75 233, 45 75 321, 45 75 386
fax.: (+48 68) 32 54 091
e-mail: export@lumel.com.pl