6 BIOLOGICAL PROCESS ENGINEERING

INTRODUCTION

AEROBIC PROCESSES

ANAEROBIC PROCESSES

Agents and reactor types in biological process engineering

This chapter contains experimental units that are suitable to familiarise students with the agents (e.g. microorganisms) and their living conditions. There are different reactor types in biological process engineering that are used to create these conditions. The programme offers a variety of options to learn about the operating principle, the areas of application and the differences of the common reactor types.

Working with the trainers requires experience, care, a suitable laboratory environment and time. Depending on the corresponding process and the substances used, sealed floors, drainage systems, water or compressed air supply, ventilation, secure storage facilities for the substances and microorganisms used, safety devices and protective clothing are required.

For the analysis of many experiments you will need professional analysis systems. These are not included in the scope of delivery of the GUNT training systems.

Please contact us. We will be happy to give advise.

Visit our website www.gunt.de

THE GUNT LEARNING CONCEPTS OF BIOLOGICAL PROCESS ENGINEERING

WHAT DOES BIOLOGICAL PROCESS ENGINEERING DEAL WITH?

Biological process engineering deals with biological mass transformation. The following agents carry out this mass transformation:

- complete living organisms with one or a few cells, such as bacteria, fungi or algae
- biologically active, isolated components of organisms, such as animal or plant cells
- biologically active, isolated components of cells, such as enzymes

Biological process engineering has to create optimal conditions for these organisms, cells and cell components. The scientific findings from the areas of biology, biochemistry, etc. are implemented in industrial-scale processes. Examples of typical processes are:

- production of drugs
- production of chemicals
- production of food
- decontamination of soil, air and wastewater
- production of biomass energy sources

Examples of agents in biological process engineering:
Ⓐ Aspergillus niger: mould fungus used for the production of citric acid, Ⓑ Escherichia coli: bacterium for the production of insulin, Ⓒ Saccharomyces cerevisiae: yeast for the production of ethanol

HOW CAN THE BIOLOGICAL PROCESSES BE CLASSIFIED?

An important distinguishing factor for biological processes is whether the microbiological processes take place under aerobic or anaerobic conditions. Biological process engineering has the task of creating the best possible ambient conditions for the respective microorganisms. In the case of fastidious anaerobic microorganisms this is the absence of oxygen. For aerobic microorganisms, on the other hand, an adequate and constant supply of oxygen must be ensured.

In the case of aerobic metabolism, the energy gain of the microorganisms is higher than during anaerobic metabolism. The aerobic microorganisms reproduce more quickly accordingly and there is more biomass.

The biological process...		...and the appropriate GUNT unit
Aerobic Processes	▶ ▶ ▶	**CE 701** ***Biofilm Process*** **CE 705** ***Activated Sludge Process*** **CE 730** ***Airlift Reactor***
Anaerobic Processes	▶ ▶ ▶	**CE 702** ***Anaerobic Water Treatment*** **CE 640** ***Biotechnical Production of Ethanol*** **CE 642** ***Biogas Plant***

Perfect conditions for microorganisms...

...and for students!

BASIC KNOWLEDGE

BIOLOGICAL PROCESSES AND REACTORS

Generally, a lot of different processes exist in process engineering. Each process is based on agents such as organisms, cells or enzymes. The respective agents are selected based the desired products and starting substances. The knowledge which agents are suitable for which application comes from basic disciplines like biology, biochemistry, etc. The knowledge which ambient conditions are ideal for the agents in order to guarantee a high quality and quantity of the products also comes from these disciplines. The respective production process is developed based on this information. The individual steps are similar for many processes and their sequence.

Basic process steps

The starting substances are also called substrates. They can be pure substances such as sugar or alcohol. Often these substances first have to be gained from substrates such as molasses, spent mash, etc. and made available for the biological agents, for example by comminution.

Water, salts and nutrients are then added to achieve the best fermentation medium for the agents. The pH value often plays an important role in this process.

Many biological processes require the specific exclusion of foreign bacteria to hinder competing microorganisms and reactions. This means that the fermentation medium and the reactor have to be sterilised.

The actual production process (fermentation) takes place in the reactor, where agents such as organisms, cells and enzymes convert the starting substances to products. The reactor has to be exactly adjusted to the respective agents. In aerobic processes, for example, even distribution of oxygen in all areas is very important. Controlling the temperature by applying or dissipating heat is also important.

The fermentation medium leaving the reactor is a complex mixture in which the product is diluted or still in the form of cells. The solids are correspondingly separated by means of filtration, centrifugation or sedimentation. The cells are opened, for example, by mechanical force or osmotic pressure. Methods such as extraction, adsorption or precipitation are used for concentrating and purifying.

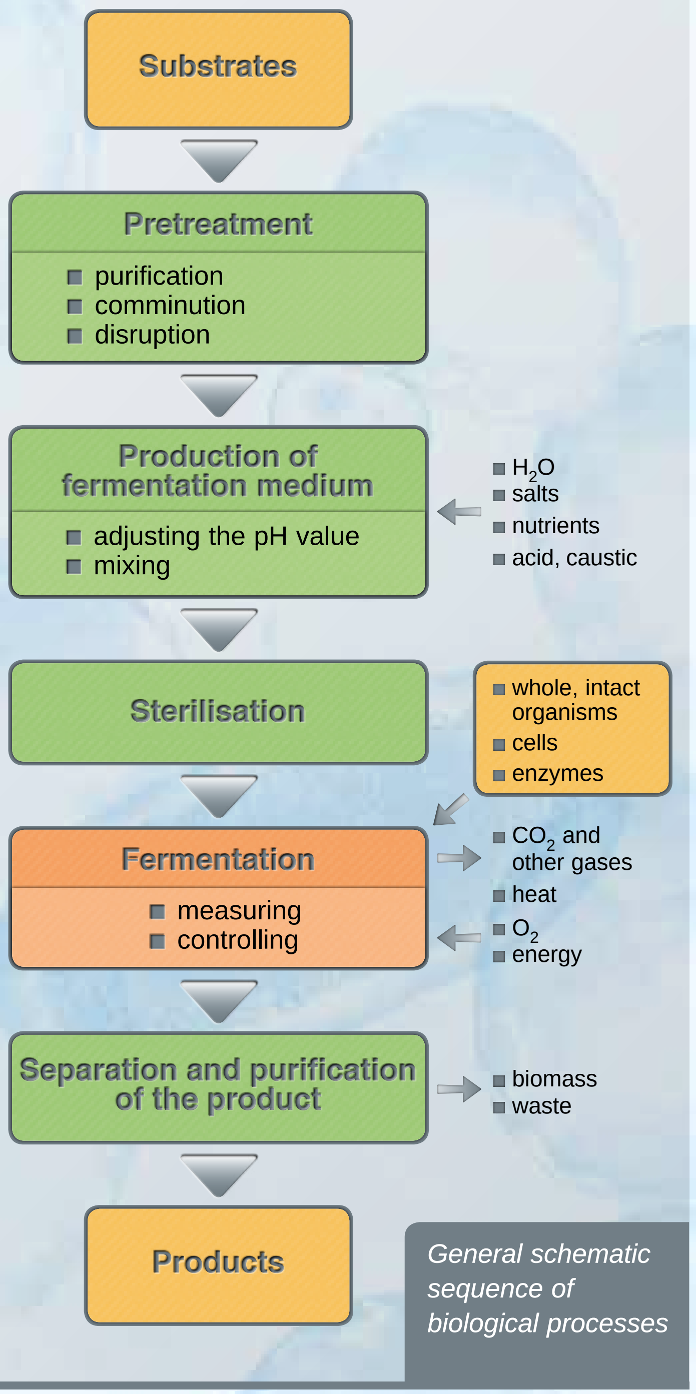

General schematic sequence of biological processes

BIOREACTORS

The bioreactor is the core element of a biotechnical production facility. One of its main tasks is optimal mixing of the reactor contents to guarantee frequent contact of the nutrients and biological agents. In addition, it is important that the interface formed between the gaseous phase and the liquid is as large as possible. In aerobic processes, oxygen is transported to the biological agents. In anaerobic methods, the quick removal of gases such as methane must be ensured. A general distinction is made between surface reactors and submerged reactors.

SURFACE REACTORS

The biological agents adhere to the surface of liquid or solid substances as a biofilm. In aerobic processes, the oxygen comes directly from the gaseous phase bordering on the biofilm.

The simplest process is the **static surface culture (A)**. In this process, a biofilm floats on the surface of a liquid substrate in a shallow dish, where it is supplied with nutrients from below and oxygen from above.

In bed reactors, the biofilm is fixed on a solid surface. In fluidised bed reactors, the solid can move freely in the liquid. In **fixed bed reactors (B)**, the solid does not move. The liquid substrate trickles through the fixed bed from above. In aerobic reactors, the oxygen is supplied from below.

SUBMERGED REACTORS

In contrast to surface reactors, the interface between the gaseous phase and the liquid must be maintained in submerged reactors by dispersing the gas in the liquid. For this purpose, energy must be continuously applied to the process. The energy can be applied in three ways:

- **Energy application by means of stirrers**

In aerobic processes, compressed air is fed into the **stirred tank reactor (C)**. A stirrer ensures fine dispersion of the air bubbles and distribution of the nutrients. High shear forces and the destruction of microorganisms can be a disadvantage.

- **Energy application by means of a fluid pump**

A pump recirculates the entire reactor contents through an external loop. There are several variants which differ by the location of the liquid intake and supply. In **jet reactors (D)**, the pump generates a propulsion jet which ensures recirculation in the reactor.

- **Energy application by means of gas**

The air bubbles themselves ensure recirculation of the reactor contents due to a density difference. The recirculation may take place inside or outside the reactor. In **airlift reactors (E)**, guiding devices ensure internal recirculation. Airlift reactors have lower shear forces and consume less energy than stirred tank reactors.

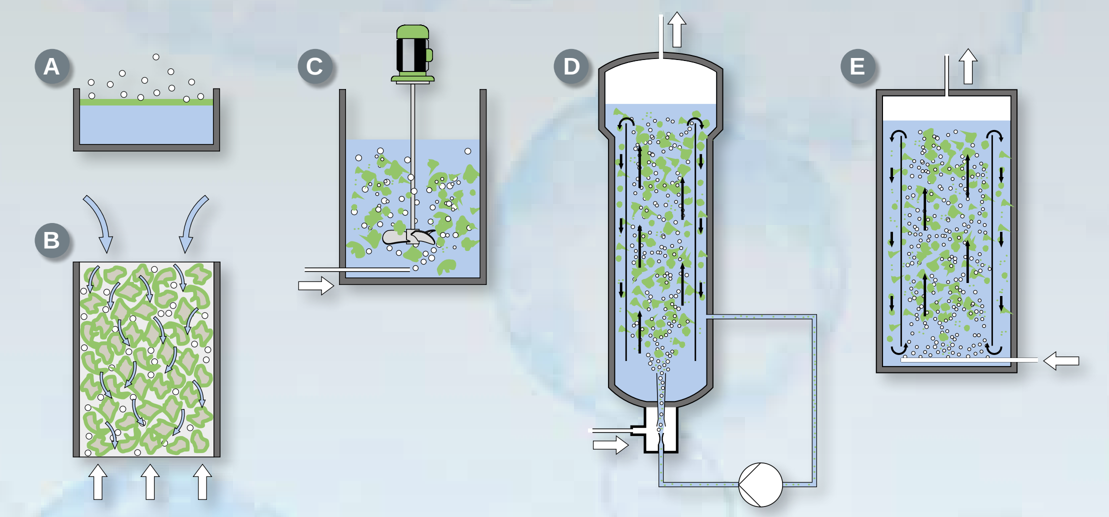

Surface reactors:
Ⓐ static surface culture
Ⓑ fixed bed reactor

Submerged reactors:
Ⓒ stirred tank reactor
Ⓓ jet reactor
Ⓔ airlift reactor

CE 701 Biofilm Process

The illustration shows: Supply unit (left) and trainer (right)

*** Aerobic biofilm processes: trickling filter**
*** Practical experiments in laboratory scale**
*** Concentration profiles**

Technical Description

Fixed biofilm processes are used in the biological treatment of wastewater. Trickling filters are based on these processes.

A pump transports the wastewater from the supply unit to the upper end of the trickling filter. The wastewater drops down on the trickling filter using a rotary distributor. In the trickling filter there is a fixed bed consisting of special carrier material. On this carrier material there is a thin layer of microorganisms (biofilm). While the wastewater trickles through the fixed bed, the microorganisms clean the wastewater by biological processes. The degradation of organic substances preferably takes place in the upper region of the trickling filter. In the lower region on the other hand, the oxidation of ammonium to nitrate (nitrification) is the predominant process. Subsequently, the wastewater flows into a collecting tank. Two pumps deliver a portion of the collected wastewater to the rotary distributor again (recirculation).

In the lower region of the trickling filter there are openings to allow aeration by natural convection. Alternatively, aeration can take place with a compressor.

To produce the biofilm, the trickling filter is first filled with the carrier material, wastewater and activated sludge. The activated sludge continuously discharging from the trickling filter sediments into a secondary clarifier. A pump transports the activated sludge back to the trickling filter. The trickling filter is aerated by a compressor. Over time, microorganisms present in the activated sludge settle on the carrier material, thus producing the biofilm.

The following flow rates are recorded and can be adjusted: wastewater, recirculation, aeration (with compressor). The speed of the rotary distributor can also be adjusted. Sampling points on the trickling filter allow concentration profiles to be recorded.

Activated sludge from a wastewater treatment plant is required for the experiments. To analyse the experiments we recommend analytical equipment for determining the following parameters:
- biochemical or chemical oxygen demand
- ammonium concentration
- nitrate concentration

The well-structured instructional material sets out the fundamentals and provides a step-by-step guide through the experiments.

Learning Objectives / Experiments

- functional principle of a trickling filter
- recording of concentration profiles
- creation of a stable operating state
- identification of the following influencing factors
  - * flow rate of recirculation
  - * volumetric loading of the trickling filter
  - * surface loading of the trickling filter
- comparison of various carrier materials

CE 701 Biofilm Process

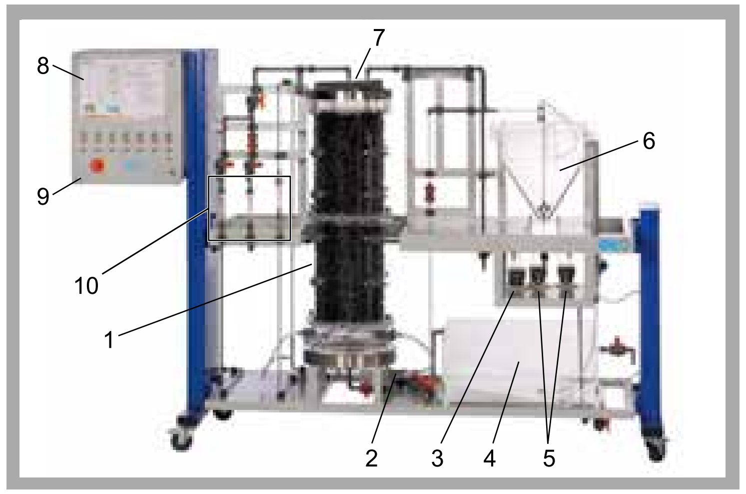

1 trickling filter, 2 compressor, 3 return sludge pump, 4 collecting tank, 5 circulation pumps, 6 secondary clarifier, 7 rotary distributor, 8 process schematic, 9 switch cabinet, 10 flow meter

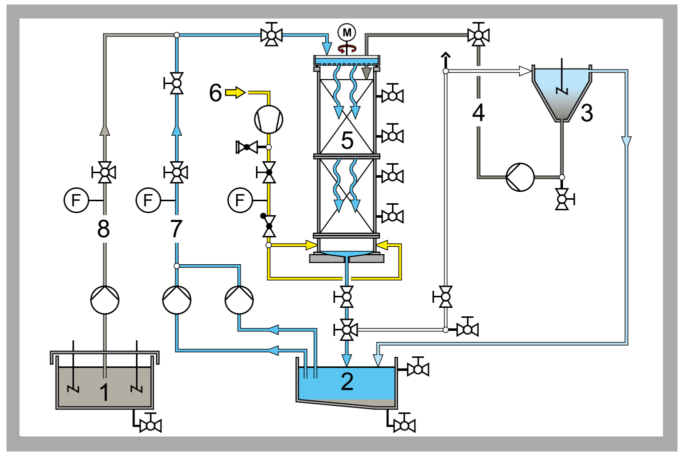

1 wastewater tank, 2 collecting tank, 3 secondary clarifier, 4 return sludge, 5 trickling filter, 6 air, 7 recirculation, 8 wastewater; F flow rate

carrier material for biofilm

Specification

[1] aerobic biofilm process for the degradation of organic substances and for nitrification
[2] transparent trickling filter with rotary distributor
[3] speed of the rotary distributor finely adjustable
[4] aeration of the trickling filter by natural convection or with compressor
[5] recording of concentration profiles is possible
[6] secondary clarifier with pump for transporting the return sludge
[7] all relevant flow rates finely adjustable
[8] separate supply unit with wastewater tank and two stirring machines
[9] two different carrier materials made of HDPE

Technical Data

Trickling filter
- diameter: approx. 340mm
- height: approx. 1000mm
- capacity: approx. 90L

Rotary distributor
- max. speed: approx. $2\,min^{-1}$

Tanks
- wastewater tank: 300L
- collecting tank: 90L
- secondary clarifier: 30L

Flow rates
- wastewater pump: max. 25L/h
- circulation pumps: 2x max. 25L/h
- return sludge pump: max. 25L/h
- compressor: max. 600L/h

Carrier material
- specific surface: 180 or $300 m^2/m^3$

Measuring ranges
- flow rate (wastewater): 2...25L/h
- flow rate (recirculation): 5...65L/h
- flow rate (aeration): 50...900L/h

Dimensions and Weight

LxWxH: 1550x790x1150mm (supply unit)
LxWxH: 2870x790x1900mm (trainer)
Total weight: approx. 500kg

Required for Operation

230V, 50/60Hz, 1 phase or 120V, 60Hz/CSA, 1 phase
Water connection, drainage, activated sludge and substances for preparation of artificial wastewater

Scope of Delivery

1 trainer
1 supply unit
1 set of hoses
1 set of tools
1 cleaning brush
2 packing units of carrier material
1 set of instructional material

Order Details

083.70100 CE 701 Biofilm Process

CE 705 Activated Sludge Process

The illustration shows: Trainer (left) and supply unit (right)

*** Wastewater treatment plant in laboratory scale**

*** Aerobic biological degradation of organic substances**

*** Nitrification and pre-denitrification**

Technical Description

The activated sludge process is the most important biological process in water treatment. CE 705 enables this process to be demonstrated.

A pump delivers raw water contaminated with dissolved organic substances (organic matter) into the aeration tank. Aerobic microorganisms (activated sludge) in the aeration tank use the organic matter as a source of nutrition, biodegrading it in the process. Since aerobic microorganisms need oxygen, the raw water is aerated in the aeration tank. The activated sludge is mixed with the raw water by stirring machines. In the secondary clarifier the activated sludge is then separated from the treated water by sedimentation. A portion of the activated sludge is returned to the aeration tank (return sludge). The treated water is collected in a tank.

It is also possible to convert ammonium into nitrate (nitrification) and nitrate into nitrogen (denitrification). For denitrification a zone without aeration can be created in the aeration tank by installing a partition wall.

The following flow rates are adjustable: raw water, return sludge, internal recirculation for pre-denitrification and air. Oxygen concentration, pH value and temperature can be contolled.

A software program is provided to display the operation states and measure data. A process schematic shows the current operating states of the individual components and the measured data.

Samples can be taken at all relevant points. Activated sludge from a wastewater treatment plant and analysis technology are required for the experiments. Recommended parameters are:

- BOD_5 (biochemical oxygen demand)
- COD (chemical oxygen demand)
- NH_4 (ammonium)
- NO_3 (nitrate)

The well-structured instructional material sets out the fundamentals and provides a step-by-step guide through the experiments.

Learning Objectives / Experiments

- learning the fundamental principle of the activated sludge process
- functional principle of nitrification and pre-denitrification
- creation of a stable operating state
- identification of the following influencing factors
  - * return sludge ratio
  - * return ratio of the internal recirculation
  - * sludge age
  - * sludge loading
  - * volumetric loading
  - * oxygen concentration, pH value and temperature
- efficiency of the pre-denitrification

CE 705 Activated Sludge Process

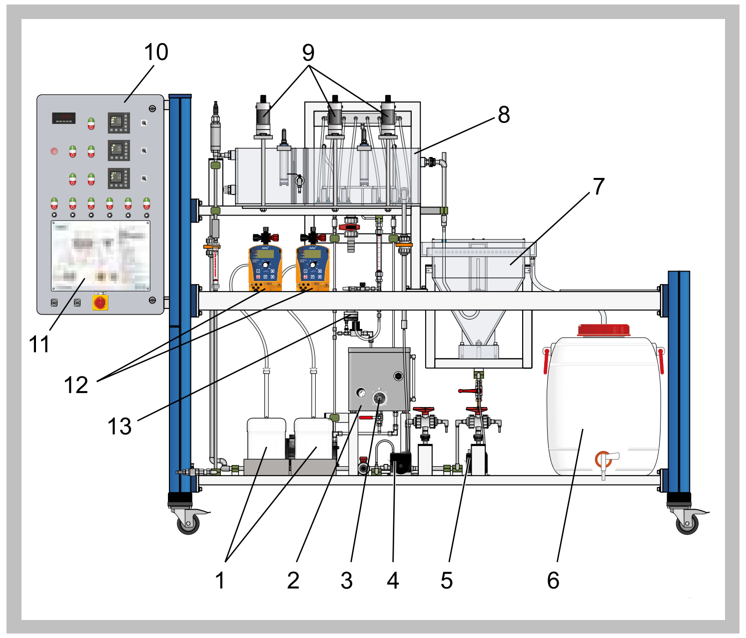

1 tanks for acid and caustic, 2 heating water tank, 3 heater, 4 circulation pump, 5 return sludge pump, 6 treated water tank, 7 secondary clarifier, 8 aeration tank, 9 stirring machines, 10 switch cabinet, 11 process schematic, 12 metering pumps, 13 compressor

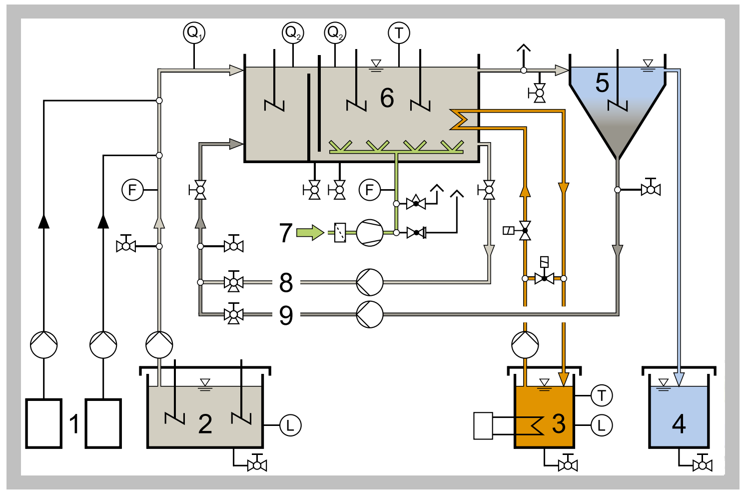

1 acid and caustic, 2 raw water, 3 heating water, 4 treated water, 5 secondary clarifier, 6 aeration tank, 7 air, 8 internal recirculation for pre-denitrification, 9 return sludge; F flow rate, L level, Q_1 pH value, Q_2 oxygen concentration, T temperature

Specification

[1] biological wastewater treatment
[2] aeration tank with 3 stirring machines
[3] secondary clarifier
[4] nitrification and pre-denitrification
[5] separate supply unit with 2 stirring machines
[6] all relevant flow rates adjustable
[7] control of temperature, pH value and oxygen concentration
[8] measurement of flow rate, temperature, pH value and oxygen concentration
[9] GUNT software with display of the operation states and data acquisition via USB under Windows Vista or Windows 7
[10] visual inspection with webcam on PC

Technical Data

Aeration tank
- capacity nitrification zone: approx. 34L
- capacity denitrification zone: approx. 17L

Tanks
- secondary clarifier: 30L
- raw water tank: 200L
- treated water tank: 80L

Flow rates
- raw water pump: max. 25L/h
- return sludge pump: max. 25L/h
- circulation pump: max. 25L/h

Speeds (stirring machines)
- secondary clarifier: max. 45min^{-1}
- all others: each max. 600min^{-1}

Measuring ranges
- flow rate (raw water): 2...25L/h
- flow rate (compressed air): 50...550L/h
- temperature: 0...40°C
- pH value: 0...14
- oxygen concentration: 0...10mg/L

Dimensions and Weight

LxWxH: 1550x790x1150mm (supply unit)
LxWxH: 2830x790x1900mm (trainer)
Weight: approx. 450kg

Required for Operation

230V, 50/60Hz, 1 phase or 120V, 60Hz, 1 phase
Water connection, drainage, activated sludge, substances for preparation of artificial wastewater, caustic soda, hydrochloric acid

Scope of Delivery

1 trainer
1 supply unit
1 set of hoses
1 GUNT software CD + USB cable
1 webcam
1 measuring cup
1 stopwatch
1 beaker
1 set of instructional material

Order Details

083.70500 CE 705 Activated Sludge Process

CE 730 Airlift Reactor

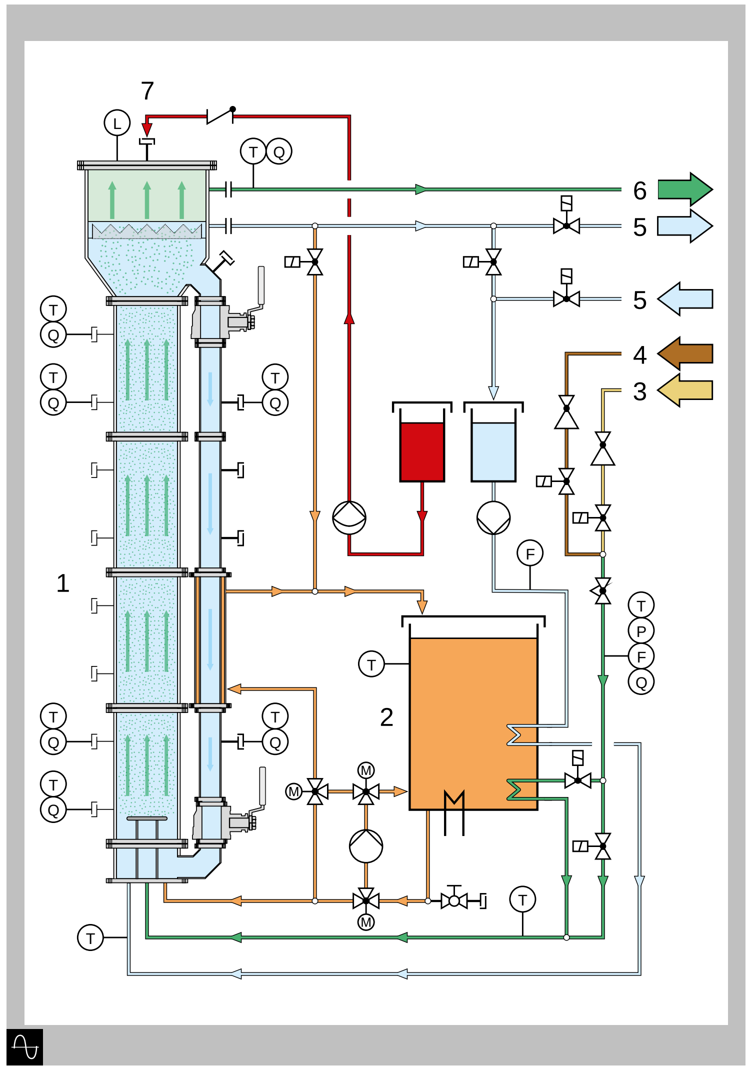

1 airlift reactor, 2 water tank, 3 compressed air, 4 nitrogen, 5 water, 6 exhaust air, 7 indicator; E conductivity, F flow rate, P pressure, Q analysis

*** Aerobic submerged reactor**

Technical Description

In the airlift reactor, air bubbles mix the reactor contents. At the same time, the air bubbles serve to supply oxygen to the microorganisms.

Compressed air enters the reactor at the bottom and ascends as small air bubbles. Part of the oxygen contained in the air is dissolved into the water in this process. The water moves upwards due to the lower density of the air/water mixture. The air bubbles leave the water at the head of the reactor. Due to the higher density, the water with the dissolved oxygen sinks again in the outer part of the reactor. The speed is adjusted via the flow rate of the air. Nitrogen can be used to remove oxygen from the water. This is required in order to be able to determine the mass transfer coefficient of oxygen in water.

Learning Objectives / Experiments

Influence of the superficial gas velocity on:
* gas content
* mass transfer coefficient
* mixing time and superficial fluid velocity

Specification

[1] determination of important characteristic variables at the airlift reactor
[2] transparent airlift reactor with outer recirculation
[3] compressed air for generation of air bubbles to recirculate the reactor contents
[4] adjustment of the superficial gas velocity via a valve and mass flow controller
[5] nitrogen to remove the oxygen from the reactor content
[6] determination of the superficial liquid velocity via the conductivity
[7] determination of the mixing time with indicator and colour change method
[8] sensor for measuring the conductivity, oxygen concentration, pressure and flow rate
[9] GUNT software for data acquisition via USB under Windows Vista or Windows 7

Technical Data

Airlift reactor
- diameter of outer tube: approx. 190mm
- diameter of inner tube: approx. 60mm
- height: approx. 2000mm

Measuring ranges
- conductivity: 4x 0...100mS/cm
- oxygen concentration: 3x 0...10mg/L
- pressure: 0...3bar

Dimensions and Weight

LxWxH: approx. 1500x790x2400mm
Weight: approx. 200kg

Required for Operation

230V, 50Hz, 1 phase
Compressed air connection, nitrogen gas cylinder with pressure reducing valve

Scope of Delivery

1 trainer
1 set of hoses
1 GUNT software CD + USB cable
1 stopwatch
1 set of instructional material

Order Details

083.73000 CE 730 Airlift Reactor

2E a division of G.U.N.T Gerätebau GmbH, P.O.Box 1125, D-22885 Barsbüttel, t +49 (40)67 08 54-0, f +49 (40)67 08 54-42, E-mail sales@gunt.de
We reserve the right to modify our products without any notifications.
Visit our Websites: www.gunt.de | www.gunt2e.de

INSTRUCTIONAL MATERIAL AND SOFTWARE

GUNT's policy is:

High-quality hardware and clearly laid-out instructional materials ensure the teaching and learning success of an experimental unit. The core elements of the instructional material provided to accompany the units are reference experiments conducted by ourselves. The description of the experiment incorporates the detailed set-up, through to interpretation of the results obtained. A group of experienced engineers devise and maintain the accompanying instructional material.

Our software – in our context meaning computerised data acquisition programs – always comes with comprehensive online help to explain the features offered the detailed use of the program. GUNT software is developed and written in-house by another group of experienced engineers.

11/2007
MT 158 MONTAGEÜBUNG KUGELHAHN UND ABSPERRVENTIL

5.4 3-Wege-Kugelhahn

In der Praxis findet man 3-Wege-Kugelhähne mit einer L- oder T-Bohrung in der Kugel. Somit ist es möglich, die Durchflussrichtungen zu ändern oder auch zwei Fluidströme miteinander zu mischen.

T-Bohrung L-Bohrung

-Bohrung.

C nach A
C nach B

04/2007
TZ 200.11 MONTAGESET BIEGEVORRICHTUNG

Technische Unterlagen im Vergleich
Grundplatte und benachbarte Teile

Grundplatte und benachbarte Teile		
Pos.	Anzahl	Benennung
2	1	Grundplatte
4	1	Unterstempel
18	1	Spannplatte
20	2	Zylinderschraube M5x12
22	2	Zylinderschraube M4x12

Explosionszeichnung

Gesamtzeichnung

Alle Rechte vorbehalten G.U.N.T. Gerätebau GmbH, Barsbüttel 01/2007

2 Montage/Demontage – Montageplan

11/2007
MT 158 MONTAGEÜBUNG KUGELHAHN UND ABSPERRVENTIL

4.3.2 Schrägsitzventil

Die Richtung der Abschlusskörperbewegung steht z.B. im Winkel von 45° zur Hauptströmungsrichtung.

Bei einem Schrägsitzventil ist der Umlenkungsgrad der Strömung geringer als bei einem Geradsitzventil. Die Druckverluste fallen deshalb vergleichbar geringer aus.

HM 700.06 Schrägsitzventil

Diese Bauform gehört zu den geraden Durchgangsventilen, da die Rohrleitungsanschlüsse gerade, d.h. in einer Achse verlaufen.

Alle Rechte vorbehalten G.U.N.T. Gerätebau GmbH, Barsbüttel 11/2007

4 Sitzventile 31

CE 702 ANAEROBIC WATER TREATMENT

A laboratory system for education and research

- two different types of reactors with temperature control
- three different operation modes
- UASB reactor with control of pH-value
- GUNT software for data acquisition

Stirred tank with secondary clarifier

UASB reactor

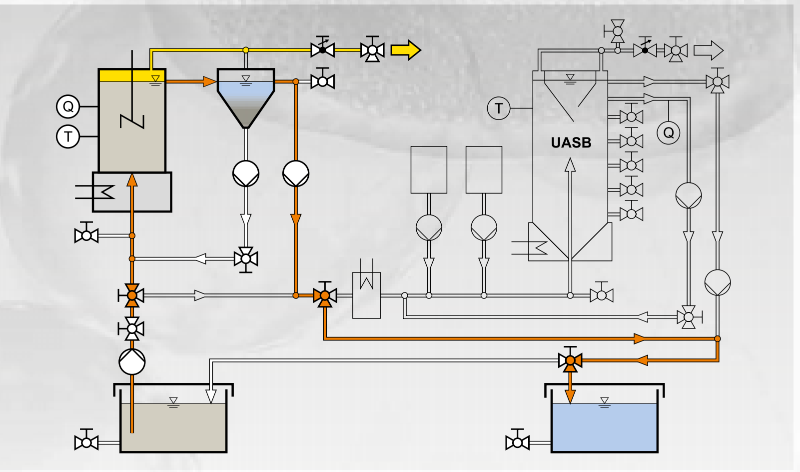

Operation mode 1 (1 stage):

☑ *Stirred tank with secondary clarifier*

☐ *UASB reactor*

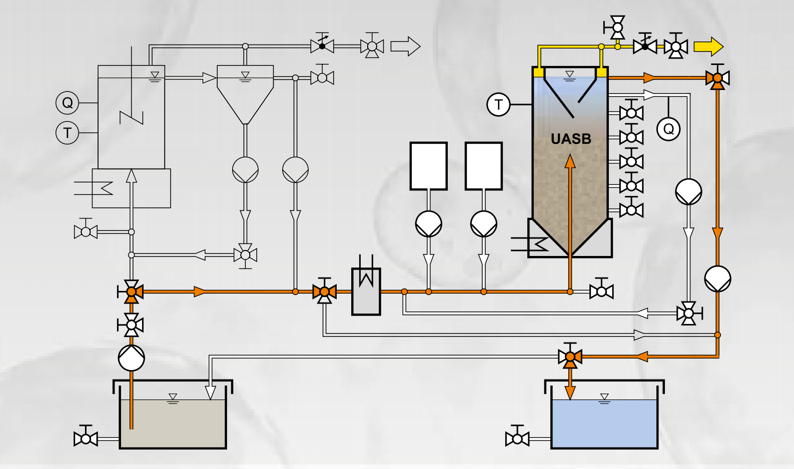

Operation mode 2 (1 stage):

☐ *Stirred tank with secondary clarifier*

☑ *UASB reactor*

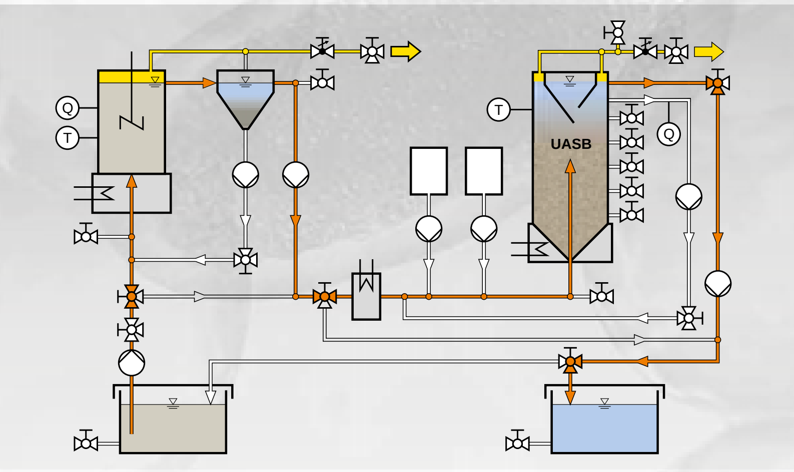

Operation mode 3 (2 stages):

☑ *Stirred tank with secondary clarifier*

☑ *UASB reactor*

THE UASB PRINCIPLE

Upflow Anaerobic Sludge Blanket

The UASB reactor is a reactor type that is frequently used in anaerobic water treatment.

The reactor contains a sludge blanket which consists of anaerobic micro-organisms in the form of pellets. These pellets are an essential characteristic of the UASB principle. The reactor is flowed through from the bottom to the top.

Biogas which mainly consists of methane and carbon dioxide is produced during the anaerobic degradation. A separation system is installed at the top of the UASB reactor. It separates biogas from treated water. In addition it guarantees that the pellets (biomass) remain in the reactor.

🟨 *Biogas*

▨ *Sludge blanket*

🟦 *Treated water*

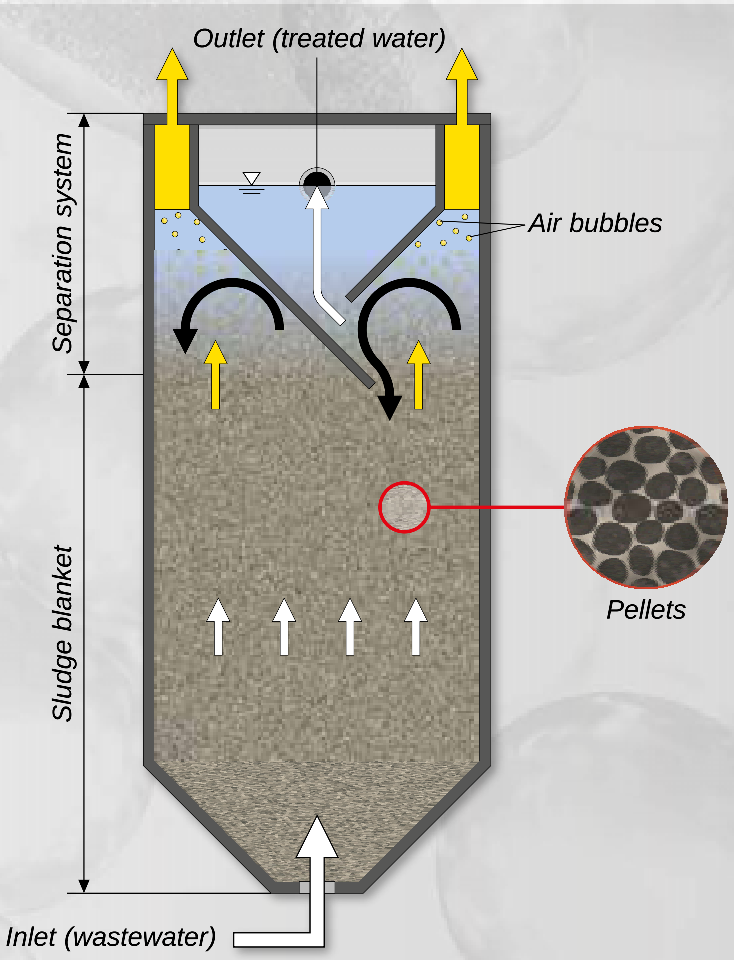

CE 702 *Anaerobic Water Treatment*

The illustration shows: Supply unit (left) and trainer (right)

*** Anaerobic degradation of organic substances in the stirred tank and UASB reactor**

*** 3 different operation modes**

Technical Description

CE 702 demonstrates the biological anaerobic water treatment. The trainer consists basically of two units:
- stirring tank with secondary clarifier
- UASB reactor

Both units can be used separately or in combination. This allows both a single stage and a dual stage operation mode. In the dual stage operation a pump first transports the raw water into a stirred tank. In this tank the acidification of the organic substances dissolved in the raw water takes place. Here, anaerobic microorganisms convert the long-chain organic substances into short-chain organic substances. In a secondary clarifier the biomass discharged from the stirred tank is separated from the water. The separated biomass is pumped back into the stirring tank.

From the secondary clarifier the raw water pretreated in this manner reaches a UASB reactor (UASB: Upflow Anaerobic Sludge Blanket). Here the final step of the anaerobic degradation takes place. The previously formed short-chain substances are converted by special microorganisms into biogas (methane and carbon dioxide). Flow through the UASB reactor is from the bottom to the top. At the top of the UASB reactor there is a separation system. This separates the generated gas from the treated water. It also ensures that the biomass remains in the reactor. The gas can be discharged externally or collected. The treated water exits at the top end of the reactor and is collected in a tank.

To adjust the flow velocity in the UASB reactor a of the treated water can be recirculated.

The temperatures in the stirred tank and the UASB reactor can be controlled. The pH value in the stirred tank is measured. In addition, the pH value in the UASB reactor can be controlled. A software and webcam are available for data acquisition and visual inspection.

Anaerobic biomass and analysis technology are required to perform the experiments. Recommended parameters are: COD (chemical oxygen demand), nitrogen and phosphor.

The well-structured instructional material sets out the fundamentals and provides a step-by-step guide through the experiments.

Learning Objectives / Experiments

- familiarisation with anaerobic water treatment
- effects of temperature and pH value on anaerobic degradation
- functional principle of a UASB reactor
- comparison of single stage and dual stage operation mode
- monitoring and optimisation of the operating conditions
- identification of the following influencing factors
  - * sludge loading
  - * volumetric loading
  - * flow velocity in the UASB reactor

CE 702 *Anaerobic Water Treatment*

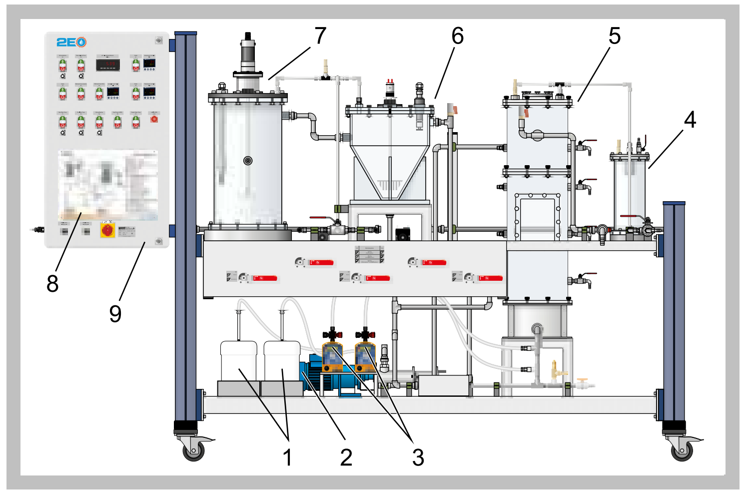

1 chemical tanks, 2 circulation pump, 3 metering pumps, 4 foam separator, 5 UASB reactor, 6 secondary clarifier, 7 stirred tank, 8 process schematic, 9 switch cabinet

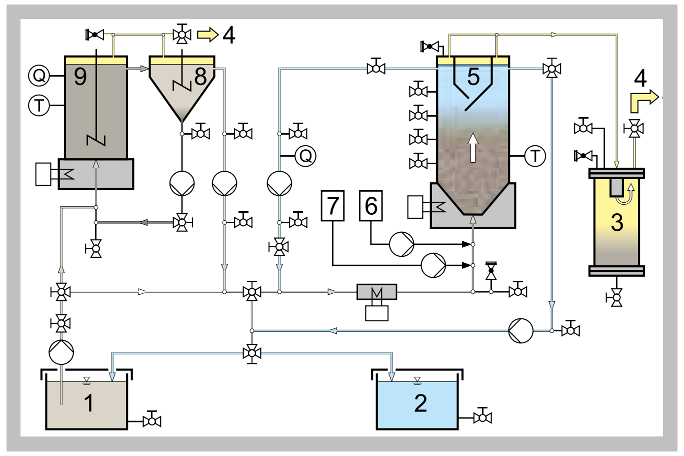

1 raw water, 2 treated water, 3 foam separator, 4 gas, 5 UASB reactor, 6 acid, 7 caustic, 8 secondary clarifier, 9 stirred tank; T temperature, Q pH value

UASB reacor during experimental operation

Specification

[1] anaerobic degradation of organic substances
[2] stirred tank with secondary clarifier
[3] UASB reactor with separation system
[4] separate supply unit with tanks for raw water and treated water
[5] single stage or dual stage operation mode
[6] temperatures in the stirred tank and the UASB reactor can be controlled
[7] control of the pH value in the UASB reactor
[8] GUNT software for data acquisition via USB under Windows Vista or Windows 7
[9] visual inspection with webcam

Technical Data

Tanks
- stirred tank: 30L
- secondary clarifier: 30L
- UASB reactor: 50L
- tank for raw water: 180L
- tank for treated water: 180L

Flow rates (max.)
- raw water pump: 25L/h
- return sludge pump: 25L/h
- circulation pump: 100L/h
- metering pumps: 2x 2,1L/h

Measuring ranges
- pH value: 0...14
- temperature: 0...100°C

Dimensions and Weight

LxWxH: 1550x790x1150mm (supply unit)
LxWxH: 2830x790x1900mm (trainer)
Weight: approx. 520kg

Required for Operation

400V, 50/60Hz, 3 phases or 230V, 60Hz/CSA, 3 phases

Water connection, drain, sewage sludge, pellets from an UASB reactor, substances for preparation of artificial wastewater, caustic soda, hydrochloric acid

Scope of Delivery

1 trainer
1 supply unit
1 set of hoses
1 stopwatch
1 set of tools
1 GUNT software CD + USB cable
1 webcam
1 set of instructional material

Order Details

083.70200 CE 702 Anaerobic Water Treatment

CE 640 BIOTECHNICAL PRODUCTION OF ETHANOL

Developing the bioethanol production in the laboratory

The experimental plant for the biotechnical production of ethanol is ideally suited for training students and professionals in chemical and biochemical engineering. Bioethanol is, and will remain, the leading biofuel worldwide. Students will get to know the entire process, starting with the raw materials up to the end product.

The CE 640 “Biotechnical Production of Ethanol” experimental plant allows all of the important processes, from liquefaction and saccharification of the raw materials to the conversion of sugar into ethanol and to distillation, to be monitored and examined.

Learning Objectives

Necessary individual steps and plant components for the production of ethanol:

- gelatinisation by steam injection
- liquefaction by use of alpha-amylase
- saccharification by use of glucoamylase
- fermentation: conversion of sugar into ethanol by yeast cultures under anaerobic conditions
- distillation: separation of ethanol from the mash

Adding the raw materials into the mash tank

Preparing the yeast

Adding the yeast into the fermentation tank

AGRICULTURAL RESEARCH INSTITUTE
Nicosia/Cyprus

Dr. Polycarpos Polycarpou

Agricultural Research
Officer Head of Soils and Water Use Department
Agricultural Engineering
Agricultural Research Institute

TWO VERY SATISFIED CUSTOMERS

Fachhochschule
Münster University of
Applied Sciences

Institute of Chemical Engineering in Steinfurt

The laboratory for chemical engineering at Münster University of Applied Sciences (Germany) offers practical training courses in the production of ethanol with the CE 640. Two dates are scheduled for the course, so that all participants can prepare the mash and monitor the result of the fermentation and distillation process of their own experiments.

An interesting film and a brochure of the CE 640 are available on our 2E website, **www.gunt2E.de**

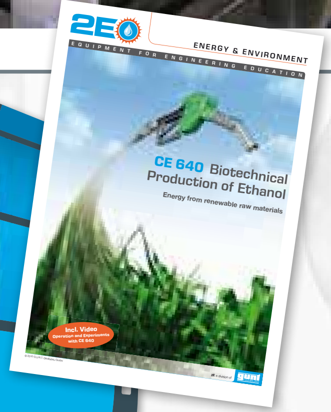

2E ENERGY & ENVIRONMENT
EQUIPMENT FOR ENGINEERING EDUCATION

CE 640 Biotechnical Production of Ethanol
Energy from renewable raw materials

Incl. Video
Operation and Experiments with CE 640

© 2010 G.U.N.T. Gerätebau GmbH

2E a division of gunt HAMBURG

CE 640 Biotechnical Production of Ethanol

*** Practical process for production of ethanol from starch-based biological raw materials**

*** System control using a PLC, touch screen for display and operation**

*** PC aided data acquisition via USB interface**

Technical Description

As well as its great importance for the chemical and foodstuffs industries, ethanol (alcohol) is increasingly used as a fuel. The CE 640 can be used to conduct realistic experiments for the production of ethanol from starch-based raw materials such as potatoes. The experimental plant consists of three main components: a mash tank, a fermentation tank and a distillation unit.

A mixture of water, finely chopped potatoes and alpha-amylase (enzyme) is filled into the mash tank. To dissolve the tightly packed starch chains in the potatoes, heating steam is injected into the mixture via a nozzle (gelatinisation). This increases the flow resistance of the mash, which would prevent further processes. The alpha-amylase breaks up the starch chains (liquefying) thereby reducing the flow resistance. Gluco-amylase is used to convert the starch into sugar (saccharification). This enzyme requires lower temperatures and pH values. The temperature is reduced using the water cooling jacket around the mash tank, the pH value is adjusted by the addition of acid and caustic. After saccharification the mash is pumped into the fermentation tank. During the fermentation process in this tank, ethanol is produced. A water cooling system controls the temperature. After the fermentation process, the mash is pumped into the distillation unit. This is equipped with a bubble tray column for separation of the ethanol. Two tanks are available, one for the spent mash, the other for the distilled ethanol.

The experimental plant has comprehensive measurement, control and operating functions, which are controlled via a PLC. A touch screen displays measured values and permits the operation of the system.

The steam supply occurs via laboratory network or an optionally available electrical steam generator (CE 715.01).

The well-structured instructional material sets out the fundamentals and provides a step-by-step guide through the experiments.

Learning Objectives / Experiments

- familiarization with the necessary individual steps and system components for production of ethanol:
  - * gelatinisation by steam injection
  - * liquefaction by use of alpha-amylase
  - * saccharification by use of gluco-amylase
  - * fermentation: conversion of sugar into ethanol by yeast cultures under anaerobic conditions
  - * distillation: separation of ethanol from the mash

CE 640 Biotechnical Production of Ethanol

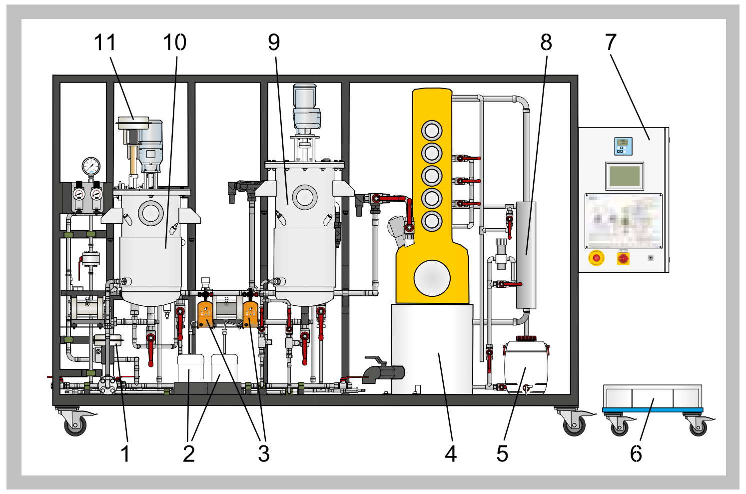

1 cooling water control valve, 2 acid/caustic tanks, 3 acid/caustic pumps, 4 distillation unit, 5 product tank, 6 spent mash tank (mobile), 7 switch cabinet, 8 condenser, 9 fermentation tank, 10 mash tank, 11 steam pressure control valve

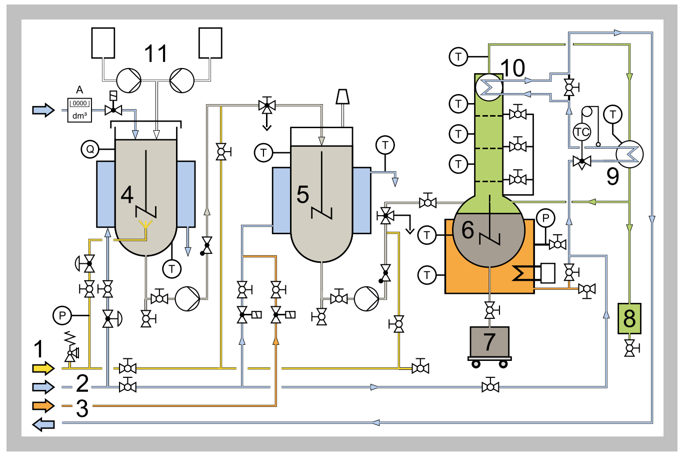

1 heating steam, 2 cooling water, 3 heating water, 4 mash tank, 5 fermentation tank, 6 distillation unit, 7 spent mash tank, 8 product tank, 9 condenser, 10 dephlegmator, 11 acid/caustic pumps and tanks;
P pressure, T temperature, A water quantity, Q pH value

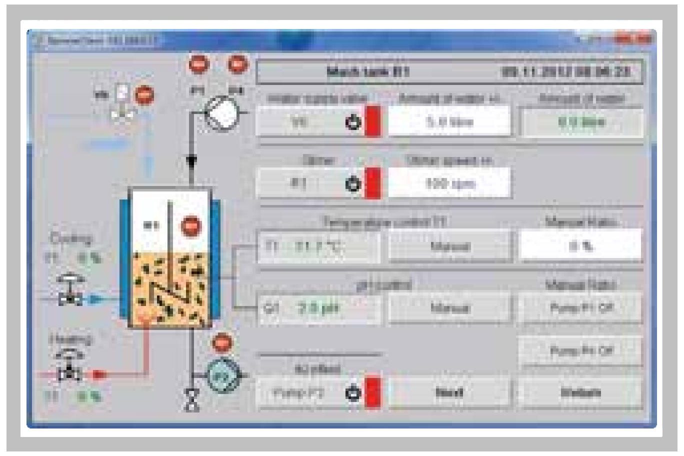

Screenshot of the touch screen for the PLC control unit

Specification

[1] batch conversion of starch-based raw materials into ethanol
[2] open mash tank with water-jacket cooling, steam injection and stirrer
[3] closed fermentation tank with stirrer and water-jacket cooling/heating
[4] distillation unit with 3 bubble trays, dephlegmator, condenser and stirrer
[5] 2 pumps for delivering the mash
[6] pH value control in the mash tank with acid and caustic delivered by metering pumps
[7] adjustment of the amount of injected heating steam, the cooling water flow rates and the head temperature by means of PID controllers
[8] system control using a PLC; operated by touch screen
[9] GUNT software for data acquisition via USB under Windows Vista or Windows 7

Technical Data

Mash tank: 40L
Fermentation tank: 50L
Product tank: 10L
Spent mash: 30L
Distillation unit
- column: DxH: 220x1200mm
- sump capacity: 45L
- sump heater: 0...7500W

2 air-operated diaphragm pumps
- drive pressure: 2bar
- max. flow rate: 15L/min
- max. head: 20m
- max. solid lump size: 4mm

2 metering pumps (acid and caustic)
- max. flow rate: each 2,1L/h

Measuring ranges
- temperature: 10x 0...150°C
- water quantity mash tank: 0...20L
- pH value: 2...10
- pressure heating steam: 0...10bar

Dimensions and Weight

LxWxH: 3500x1200x2000mm
Weight: approx. 500kg

Required for Operation

400V, 50Hz, 3 phases or 230V, 60Hz, 3 phases
compressed air (1,5...6bar), cooling water
(min. 400L/h), steam (15kg/h, min. 3bar),
heating water (min. 400L/h, 40°C)

Scope of Delivery

1 experimental plant
1 set of enzymes etc.
1 areometer
1 set of accessories
1 GUNT software CD + USB cable
1 set of instructional material

Order Details

083.64000 CE 640 Biotechnical Production of Ethanol

BASIC KNOWLEDGE

BIOGAS PLANT

Rising energy requirements and the limited availability of fossil energy sources make new energy supply concepts necessary. Energy production from biomass plays an important role in future energy concepts besides solar and wind energy.

In a biogas plant, microorganisms biologically degrade the organic starting substances (substrate) under exclusion of light and oxygen. The product of this anaerobic degradation is a gas mixture which primarily consists of methane. This gas mixture is called biogas.

The complex processes of anaerobic degradation can be simplified as four consecutive phases.

Phase 1: Hydrolysis

The substrate used in biogas plants is available as undissolved, high-molecular compounds such as proteins, fats and carbohydrates. Therefore these compounds first have to be broken down into their individual components. Hydrolysis products are amino acids, sugars and fatty acids.

Phase 2: Acidification

The hydrolysis products are then biochemically decomposed further, primarily into propionic acid, butyric acid, acetic acid, alcohols, hydrogen and carbon dioxide.

Phase 3: Formation of acetic acid

The products of the previous phase are now converted into acetic acid, hydrogen and carbon dioxide.

Phase 4: Formation of methane

Methanogens can use either acetic acid (CH_3COOH) or carbon dioxide and hydrogen for their metabolism. So methane (CH_4) can be produced in the following two reactions:

$$CH_3COOH \longrightarrow CH_4 + CO_2$$

$$4H_2 + CO_2 \longrightarrow CH_4 + 2H_2O$$

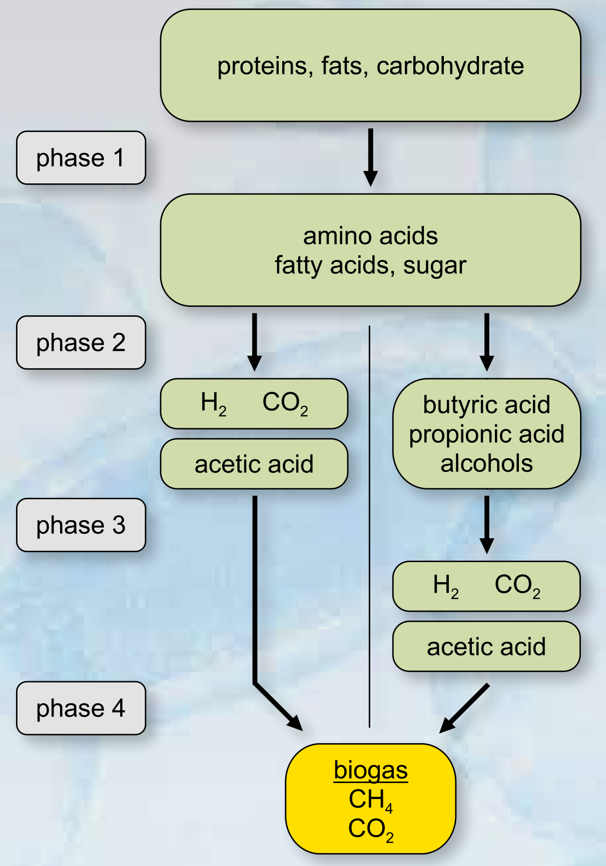

Fundamental principle of anaerobic degradation

Use of biogas

The biogas produced can now be combusted in a combined heat and power plant. This converts the energy stored in the biogas to mechanical energy. A connected generator then converts this mechanical energy into electric power. In addition to electrical energy, a combined heat and power plant also produces heat which can, for example, be used to heat the reactor or buildings.

How a biogas plant works:

__1__ slurry from livestock husbandry
__2__ renewable raw materials (e.g. maize)
__3__ storage for shredded raw materials
__4__ storage for feeding the bioreactor
__5__ bioreactor (fermenter)
__6__ storage for digestate
__7__ biogas treatment
__8__ combined heat and power plant
__9__ water circuit to heat the bioreactor
__10__ feed of the current into the public power grid
__11__ digestate (use as fertilizer)

Ambient conditions

The microorganisms involved in the anaerobic degradation have different requirements regarding the ambient conditions. This applies primarily to the pH value and the temperature. Especially methanogens are very sensitive to deviations of these two process variables from their respective optimal value.

If all 4 phases of the degradation take place in one reactor, a compromise regarding the pH value and temperature needs to be found. This results in a lower biogas yield. From a process engineering point of view, a two-stage process in two separate reactors is more practical as this enables the ambient conditions to be adjusted more specifically to the respective bacteria.

Parameter	Phases 1+2	Phases 3+4
pH-value	5,2…6,3	6,7…7,5
Temperature	25…35°C	35…60°C

Optimal ambient conditions for anaerobic degradation

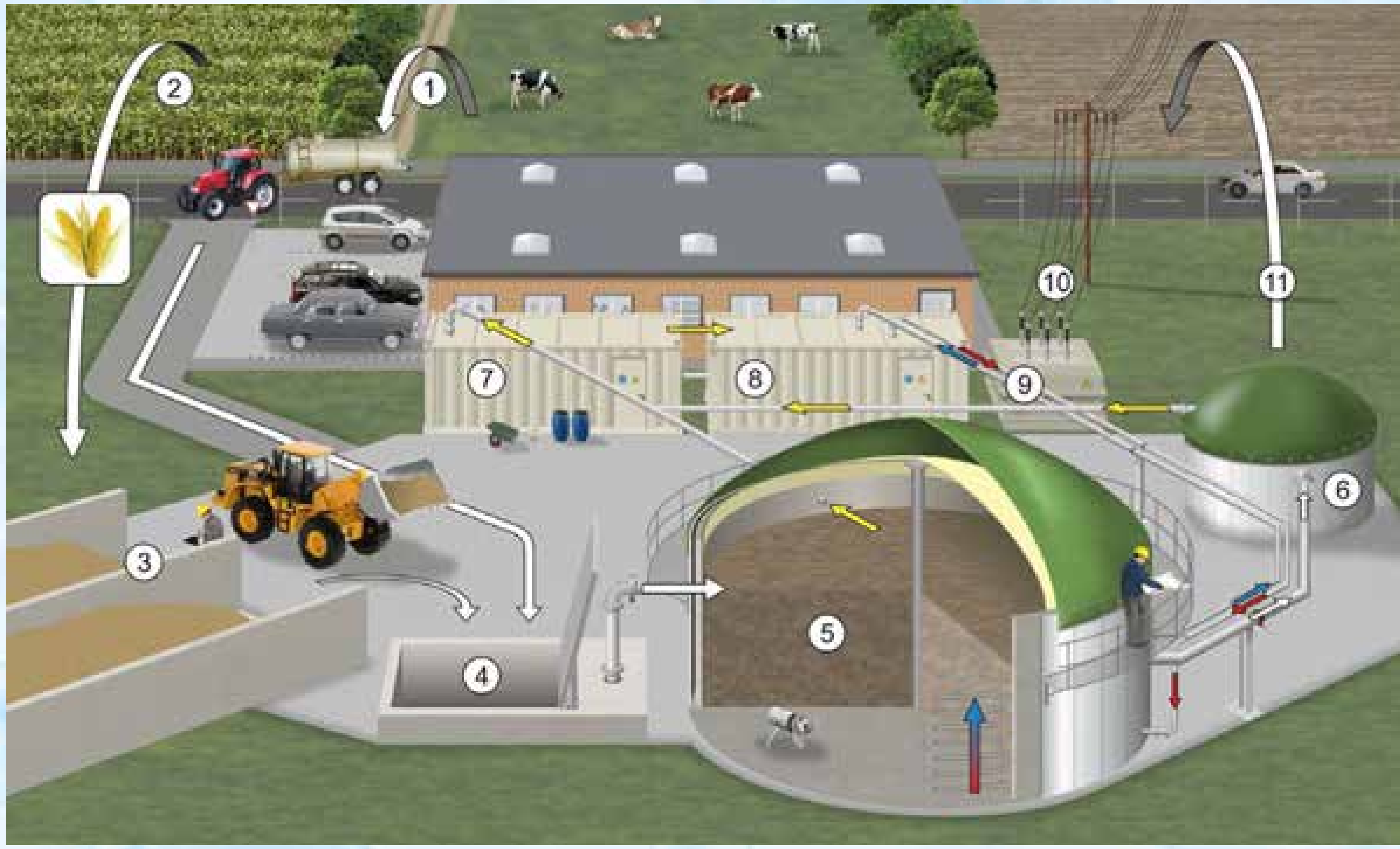

CE 642 Biogas Plant

The illustration shows from left to right: supply unit, trainer and post-fermentation unit

*** Two-stage biogas plant**

*** Extensive biogas analysis**

*** System control using a PLC, touch screen for display and operation**

Technical Description

In a biogas plant, microorganisms biologically degradate the organic starting substances (substrate) under exclusion of light and oxygen. The product of this anaerobic degradation is a gas mixture which primarily consists of methane. This gas mixture is called biogas.

The experimental plant CE 642 serves to demonstrate the generation of biogas in a practical manner. The substrate is a suspension of shredded organic solids. It is hydrolysed and acidified in the first stirred reactor. Here, anaerobic microorganisms convert the long-chain organic substances into short-chain organic substances. The biogas forms in the second stirred reactor in the last step of the anaerobic degradation. It contains mainly methane and carbon dioxide. This two-stage method enables the ambient conditions to be adjusted and optimised in both reactors separately. The digestate is collected in a separate tank.

Temperature and pH value are controlled in both reactors. The resulting biogas is dried in a column. The column is filled with silica gel. Subsequently, the flow rate, humidity, methane content, carbon dioxide content and temperature of the biogas are measured. The system is controlled by means of a PLC which is operated via a touch screen. The measured values can be transmitted to a PC via USB and analysed with the GUNT software.

The experimental plant enables both a continuous and a discontinuous (batch) operation mode. Anaerobic biomass from a biogas plant is required for the experiments. E.g. potatoes or maize can be used to produce the substrate. An inert gas (e.g. carbon dioxide) is required to flush the experimental plant.

The well-structured instructional material sets out the fundamentals and provides a step-by-step guide through the experiments.

Learning Objectives / Experiments

- achieving a stable operating state
- influence of the following parameters on the biogas generation
  - * temperature
  - * substrate
  - * volumetric loading
  - * pH value
- influence of the operation mode on the biogas yield
  - * single stage or dual stage
  - * with and without post-fermentation
  - * continuous and discontinuous
- determining the following parameters depending on the operating conditions
  - * biogas yield
  - * biogas flow rate
  - * biogas quality

CE 642 Biogas Plant

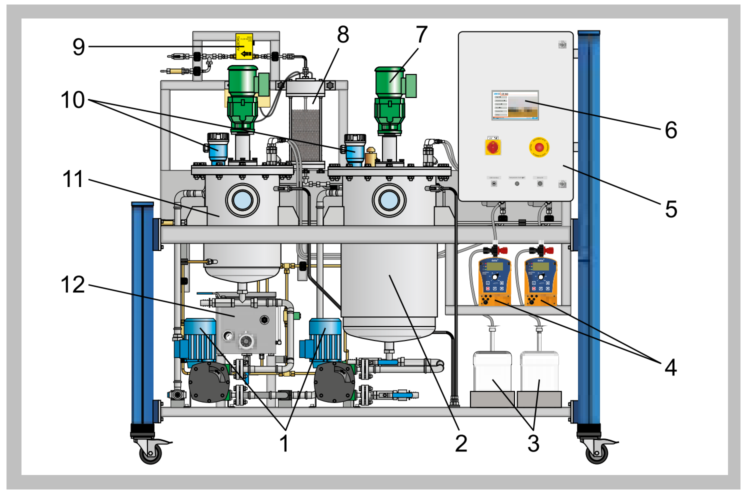

1 peristaltic pumps, 2 reactor (stage 2), 3 tanks for acid and caustic, 4 metering pumps, 5 switch cabinet, 6 PLC with touch screen, 7 stirring machine, 8 drying column, 9 flow meter (biogas), 10 capacitive level sensors, 11 reactor (stage 1), 12 heating water tank,

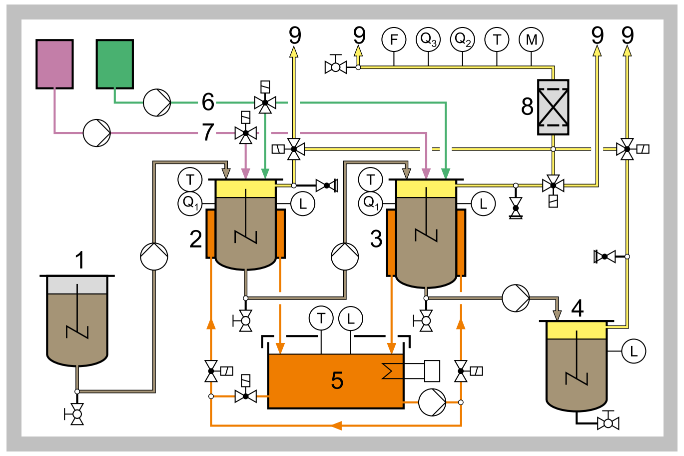

1 substrate tank, 2 reactor (stage 1), 3 reactor (stage 2), 4 digestate tank, 5 heating water, 6 acid, 7 caustic, 8 drying column, 9 biogas; F flow rate, L level, M humidity, Q_1 pH value, Q_2 methane content, Q_3 carbon dioxide content, T temperature

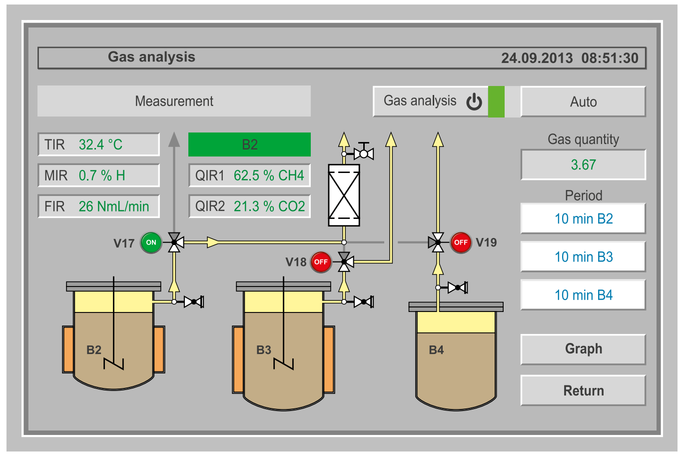

Gas analysis 24.09.2013 08:51:30

TIR 32.4 °C

MIR 0.7 % H

FIR 26 NmL/min

QIR1 62.5 % CH4

QIR2 21.3 % CO2

V17 ON

V18 OFF

V19 OFF

Gas quantity 3.67

Period 10 min B2

10 min B3

10 min B4

Operating interface of the PLC: menu item "gas analysis"

Specification

[1] two-stage biogas plant (continuous or discontinuous operation possible)
[2] 2 stirred reactors made of stainless steel with capacitive level sensors
[3] separate supply unit with substrate tank and feed pump
[4] control of temperature and pH value in the reactors
[5] 2 metering pumps for acid and caustic
[6] heating water circuit with tank, heater, temperature controller and pump
[7] biogas is dried with silica gel
[8] biogas analysis: flow rate, methane content, carbon dioxide content, humidity and temperature
[9] control of the experimental plant using a PLC, operated by touch screen
[10] GUNT software for data acquisition via USB under Windows Vista or Windows 7

Technical Data

Tanks made of stainless steel
- reactor (stage 1): approx. 20L
- reactor (stage 2): approx. 70L
- substrate tank: approx. 25L
- digestate tank: approx. 25L

Pumps
- 3 peristaltic pumps: each max. 25L/h
- 2 metering pumps: each max. 2,1 L/h
- heating water pump: max. 480L/h

Stirring machines
- substrate tank: max. 200min^{-1}
- reactors: each max. 120min^{-1}

Measuring ranges
- methane content: 0...100%,
- carbon dioxide content: 0...100%
- flow rate (biogas): 0…30NL/h
- pH value: 2x 1...14
- humidity: 0...100%
- temperature (reactors and biogas): 3x 0...100°C

Dimensions and Weight

LxWxH: 1100x790x1400mm (supply unit)
LxWxH: 2060x790x1910mm (trainer)
LxWxH: 1100x790x1400mm (post- fermentation unit)
Total weight: approx. 770kg

Required for Operation

400V, 50/60Hz, 3 phases or 230V, 60Hz, 3 phases
Biomass from a biogas plant, substrate (recommendation: potatoes or maize), caustic soda, hydrochloric acid, intert gas (e.g. carbon dioxide)

Scope of Delivery

1 experimental plant, 1 packing unit of silica gel,
1 set of accessories, 1 GUNT software CD,
1 USB cable, 1 set of instructional material

Order Details

083.64200 CE 642 Biogas Plant