RE82 TEMPERATURE CONTROLLER

LUMEL EVERYTHING COUNTS

- Universal measuring input.
- Binary input control.
- Set point value: constant value, programmed or from an additional input.
- On/off, PID, PID step-by-step control (valve control) or PID of heating-cooling type.
- 2 relay outputs in standard and optional 2 outputs: relay, OC or analog output.
- Soft-start function.
- 8 types of alarms.
- Alarm latch function.
- Timer function.
- Measurement of heater current and check of heater overheating or shortening of the control element (e.g. SSR).

Features:

Timer, Password protection, SP X2, Smart PID, Auto, On/Off, Soft Start, AL Latch, eCon

Inputs:

DC, CT

Outputs:

MOD BUS, RS 485

Galvanic isolation:

Supply, RS 485

Example of application

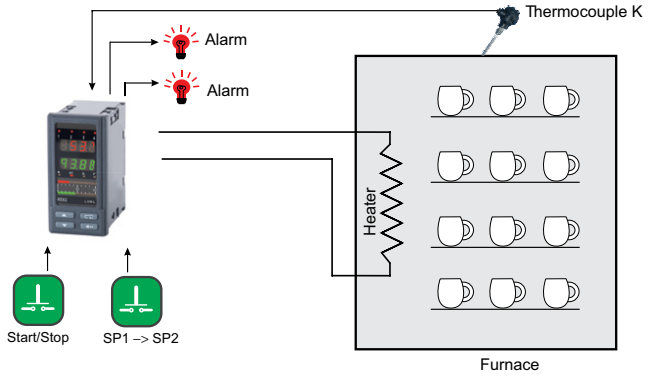

Process control of ceramic firing.

Input

Input type	Range	Error
Pt100	-200 .. 850°C	0.2%
Pt1000	-200 .. 850°C	0.2%
Fe-CuNi (J)	-100 .. 1200°C	0.3%
Cu-CuNi (T)	-100 .. 400°C	0.3%
NiCr-NiAl (K)	-100 .. 1372°C	0.3%
PtRh10-Pt (S)	0 .. 1767°C	0.5%
PtRh13-Pt (R)	0 .. 1767°C	0.5%
PtRh30-PtRh6 (B)	200 .. 1767°C	0.5%
NiCr-CuNi (E)	-100 .. 1000°C	0.3%
NiCrSi-NiSi (N)	-100 .. 1300°C	0.3%
Chromel-kopel (L)	-100 .. 800°C	0.3%
Current channels (I)	0/4 .. 20 mA	0.2% +/- 1 digit
Voltage channels (U)	0 .. 5/10 V	0.2% +/- 1 digit
Binary	voltageless	

Output

Output type	Properties	Load capacity
Relay voltageless output	NO contacts	2 A/ 230 V a.c. (outp. 1, 2, 3 and 4)
Transistor voltage output	0/5 V	max 40 mA
Continuous voltage output	0 .. 10 V	at $R_{load} \geq 1$ kΩ
Continuous current output	0 .. 20 mA, 4 .. 20 mA	at $R_{load} \leq 500$ Ω
Supply of measuring relays	24 V d.c.	max 30 mA

Digital interface

Interface type	RS-485	Mode
Protocol	Modbus RTU	8N2, 8E1, 8O1, 8N1
Baud rate	4.8, 9.6, 19.2, 38.4, 57.6 kbit/s	

External features

Readout field	2 x 4 digits	digit height: 10 mm, red and green
Overall dimensions	48 x 96 x 93 mm	
Weight	< 0.2 kg	
Protection grade	from forntal side: IP65	from terminal side: IP20
Bargraph	2 x 21 points	color: red and green

Export department:
+48 68 45 75 139/ 321/ 368
Fax: +48 68 32 54 091
e-mail: export@lumel.com.pl

LUMEL S.A.
ul. Sulechowska 1
65-022 Zielona Góra
POLAND
WWW.LUMEL.COM.PL

RE82 TEMPERATURE CONTROLLER

Rated operating conditions

Supply voltage	85 .. 253 V a.c./ d.c.	20 .. 40 V a.c./d.c.
Temperature	ambient: 0...23...50˚C	storage: -20...70˚C
Humidity	< 85%	without condensation
Operating position	any	

Safety and compatibility requirements

Electromagnetic compatibility	noise immunity	acc. to EN 61000-6-2
	noise emissions	acc. to EN 61000-6-4
Pollution level	2	
Installation category	III	
Maximal phase-to-earth operating voltage	supply, output: 300 V	input circuits: 50 V
Altitude above sea level	2000 m	

Connection diagrams

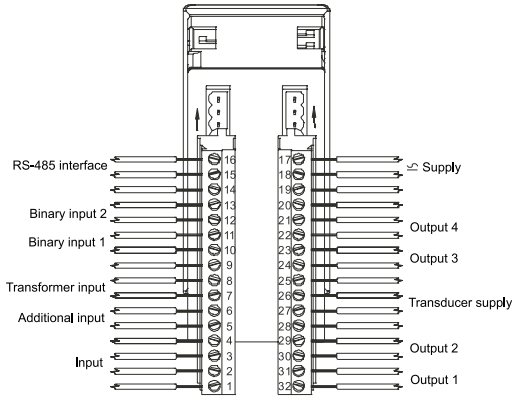

Fig.1. View of controller connection terminal strips.

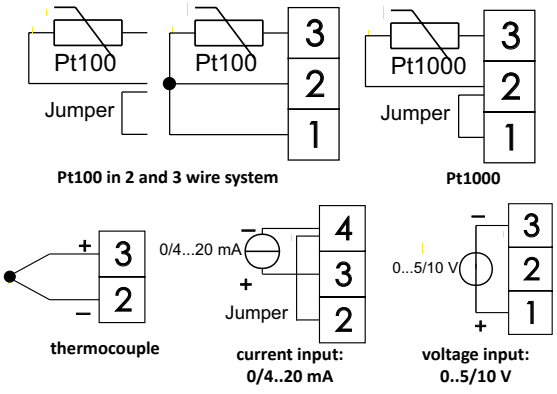

Fig.2. Connection of input signals.

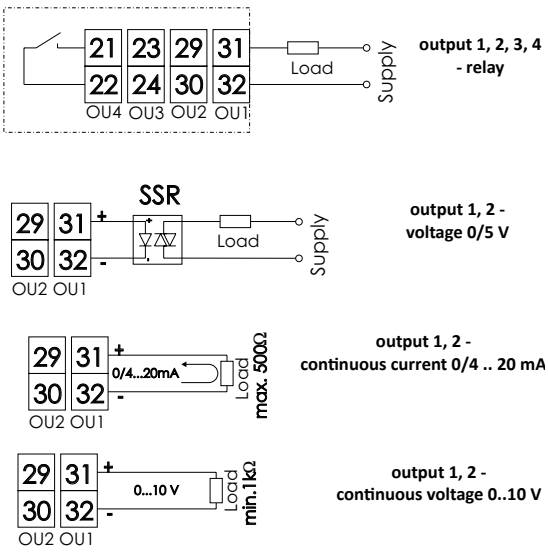

Fig.3. Control/alarm output.

Ordering

	RE82 -	X	X	X	X	X	X	X
Output 1:								
relay		1						
voltage 0/5 V		2						
continuous current: 0/4 .. 20 mA		3						
continuous voltage: 0 .. 10 V		4						
Output 2:								
relay[1]			1					
voltage 0/5 V			2					
continuous current: 0/4 .. 20 mA			3					
continuous voltage: 0 .. 10 V			4					
Supply of transducers:								
none				0				
supply of transducers 24 V d.c. 1 W				1				
Supply:								
85 .. 253 V a.c./ d.c.					1			
20 .. 40 V a.c./ d.c.					2			
Version:								
standard						00		
custom-made[2]						XX		
Language:								
Polish							P	
English							E	
other[2]							X	
Additional quality requirements:								
without additional quality requirements								0
with an extra inspection quality certificate								1
acc. to customer's request[2]								X

[1] only when a relay or voltage output 0/5 V is also selected on the output 1
[2] only after agreeing with the manufacturer

Order example:

The code **RE82 - 1 2 0 1 00 E 0** means:

RE82 - controller of RE82 type
1 - output 1: relay
2 - output 2: volatge 0/5 V
0 - wihout supply of transducers
1 - supply: 85 .. 253 V a.c./ d.c.
00 - standard version
E - English language version
0 - without additional quality requirements.

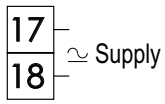

Fig.4. Supply.

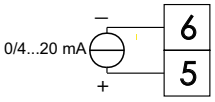

Fig.5. Signal of additional output.

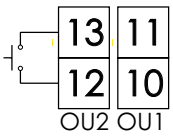

Fig.6. Binary input 1 and 2.

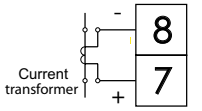

Fig. 7. Current transformer input.

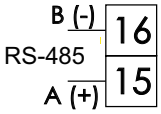

Fig.8. RS-485 interface.

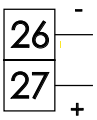

Fig.9. Supply of 24 V transducers.

For more information about LUMEL's products please visit our website: www.lumel.com.pl

Export department:
+48 68 45 75 139/ 321/ 368
Fax: +48 68 32 54 091
e-mail: export@lumel.com.pl

LUMEL S.A.
ul. Sulechowska 1
65-022 Zielona Góra
POLAND
WWW.LUMEL.COM.PL